Installation instructions

NEXUS

HEAT METER

INDEX:

General information 2

Safety regulations 3

Description 4
Overall view 4
Tecnical data 5

Installation 6
Sitting the heat meter 6
Clearances 6
Mounting the heat meter 6
Water connections 6
Water circuit diagram 7
Electrical connection 8
Electrical diagram 8
To gain general access 9
Removing the casing 9
Peripherical connections 10
Fitting the room-thermostat 10
Fitting the external sensor 10

Commissioning 11
Initial preparation 11
Setting the domestic hot water temperature 11
Operation setting 11
Configuration 11
Heating slope selection 11
Data alarm display 13
Setting the communication address (Bus address) 13

Heat meter protection and safety system 14
Anti-freeze protection 14
Maximum flow temperature 14
Limescale protection 14
Circulation pump anti-seizure 14
Temperature probe fault diagnostic function 14
Alarm input 14
Calorie meter fault display and management 15

Maintenance 16
Draining procedures 16
Draining the domestic hot water system 16
Before beginning maintenance work 16

General information

This mnual is an integral and essential part of the product.
It should be kept with the appliance so that it can be consulted by the user and our authorised personnel.
Please carefully read the instructions and notices about the unit contained inthis manual, as they provide important information regarding the safe installation, use and maintenance of the product.
For operating instructions please consult the separate Users Manual.
Read the instructions and recommendations in these Installation carefully to ensure proper installation, use and maintenance of the appliance.
Keep this manual in a safe place. You may need it for your own reference while Servicing Technicians or your installer may need to consult it in the future.
This is a combined appliance for the production of central heating (C.H.) and domestic hot water (D.H.W.).
This appliance must be used only for the purpose for which it is designed.
The manufacturer declines all liability for damage caused by improper ornegligent use.
Installation, maintenance and all other interventions must be carried out in full conformity with the governing legal regulations and the instructions provided by the manufacturer.
Incorrect installation can harm people and animals and damage property; the manufacturing company will not be held responsible for such damage.
The heat meter is delivered in a cardboard box. Once you have removed all thepackaging, make sure the appliance is intact and that no parts are missing. If this is not the case, contact your supplier.
Keep all packaging materials (clips, plastic bags, polystyrene foam, etc.) out of children's reach as they are hazardous.
In the case of faults or failure, switch off the appliance. Do not tamper with theappliance.
Always disconnect the appliance either by unplugging it from the mains or turning off the mains switch before cleaning the appliance or carrying out maintenance.
For repairs, call your local Authorised Servicing Agent and request the use of original spare parts. For in-guarantee repairs contact MTS (GB) Limited.
Turn the heat meter off and move the external switch to "OFF" to clean the exterior parts of the appliance. Clean with a damp cloth dipped in soapy water. Do not use aggressive detergents, insecticides or toxic products.

Safety regulations

Key to symbols:

⚠ Failure to comply with this warning implies the risk of personal injury, in some circumstances even fatal

△ Failure to comply with this warning implies the risk of damage, in some circumstances even serious, to property, plants or animals.

Install the appliance on a solid wall which is not subject to vibration.

⚠ Noisiness during operation.

When drilling holes in the wall for installation purposes, take care not to damage any electrical wiring or existing piping.

⚠△ Electrocution caused by contact with live wires. Explosions, fires or intoxication caused by gas leaking from damaged piping. Damage to existing installations. Flooding caused by water leaking from damaged piping.

Perform all electrical connections using wires which have a suitable section.

△ Fire caused by overheating due to electrical current passing through undersized cables.

Protect all connection pipes and wires in order to prevent them from being damaged.

⚠△ Electrocution caused by contact with live wires. Explosions, fires or intoxication caused by gas leaking from damaged piping. Flooding caused by water leaking from damaged piping.

Make sure the installation site and any systems to which the appliance must be connected comply with the applicable norms in force.

⚠△ Electrocution caused by contact with live wires which have been installed incorrectly. Damage to the appliance caused by improper operating conditions.

Use suitable manual tools and equipment (make sure in particular that the tool is not worn out and that its handle is fixed properly); use them correctly and make sure they do not fall from a height. Replace them once you have finished using them.

⚠△ Personal injury from the falling splinters or fragments, inhalation of dust, shocks, cuts, pricks and abrasions. Damage to the appliance or surrounding objects caused by falling splinters, knocks and incisions.

Use electrical equipment suitable for its intended use (in particular, make sure that the power supply cable and plug are intact and that the parts featuring rotary or reciprocating motions are fastened correctly); use this equipment correctly; do not obstruct passageways with the power supply cable, make sure no equipment could fall from a height. Disconnect it and replace it safely after use.

⚠△ Personal injury caused by falling splinters or fragments, inhalation of dust, knocks, cuts, puncture wounds, abrasions, noise and vibration. Damage to the appliance or surrounding objects caused by falling splinters, knocks and incisions.

Make sure any portable ladders are positioned securely, that they are suitably strong and that the steps are intact and not slippery and do not wobble when someone climbs them. Ensure someone provides supervision at all times.

⚠ Personal injury caused by falling from a height or cuts (stepladders shutting accidentally).

Make sure any rolling ladders are positioned securely, that they are suitably strong, that the steps are intact and not slippery and that the ladders are fitted with handrails on either side of the ladder and parapets on the landing.

⚠ Personal injury caused by falling from a height.

During all work carried out at a certain height (generally with a difference in height of more than two metres), make sure that parapets are used to surround the work area or that individual harnesses are used to prevent falls. The space where any accidental fall may occur should be free from dangerous obstacles, and any impact upon falling should be cushioned by semi-rigid or deformable surfaces.

⚠ Personal injury caused by falling from a height.

Make sure the workplace has suitable hygiene and sanitary conditions in terms of lighting, ventilation and solidity of the structures.

⚠ Personal injury caused by knocks, stumbling etc.

Protect the appliance and all areas in the vicinity of the work place using suitable material.

△ Damage to the appliance or surrounding objects caused by falling splinters, knocks and incisions.

Handle the appliance with suitable protection and with care.

△ Damage to the appliance or surrounding objects from shocks, knocks, incisions and squashing.

During all work procedures, wear individual protective clothing and equipment.

⚠ Personal injury caused by electrocution, falling splinters or fragments, inhalation of dust, shocks, cuts, puncture wounds, abrasions, noise and vibration.

Place all debris and equipment in such a way as to make movement easy and safe, avoiding the formation of any piles which could yield or collapse.

△ Damage to the appliance or surrounding objects from shocks, knocks, incisions and squashing.

All operations inside the appliance must be performed with the necessary caution in order to avoid abrupt contact with sharp parts.

⚠ Personal injury caused by cuts, puncture wounds and abrasions.

Reset all the safety and control functions affected by any work performed on the appliance and make sure they operate correctly before restarting the appliance.

⚠△ Explosions, fires or intoxication caused by gas leaks or an incorrect flue gas exhaust. Damage or shutdown of the appliance caused by out-of-control operation.

Before handling, empty all components that may contain hot water, carrying out any bleeding if necessary.

⚠ Personal injury caused by burns.

Descale the components, in accordance with the instructions provided on the safety data sheet of the product used, airing the room, wearing protective clothing, avoid mixing different products, and protect the appliance and surrounding objects.

⚠△ Personal injury caused by acidic substances coming into contact with skin or eyes; inhaling or swallowing harmful chemical agents. Damage to the appliance or surrounding objects due to corrosion caused by acidic substances.

If you detect a smell of burning or smoke, keep clear of the appliance, disconnect it from the electricity supply, open all windows and contact the technician.

⚠ Personal injury caused by burns, smoke inhalation, intoxication.

Description

Overall view

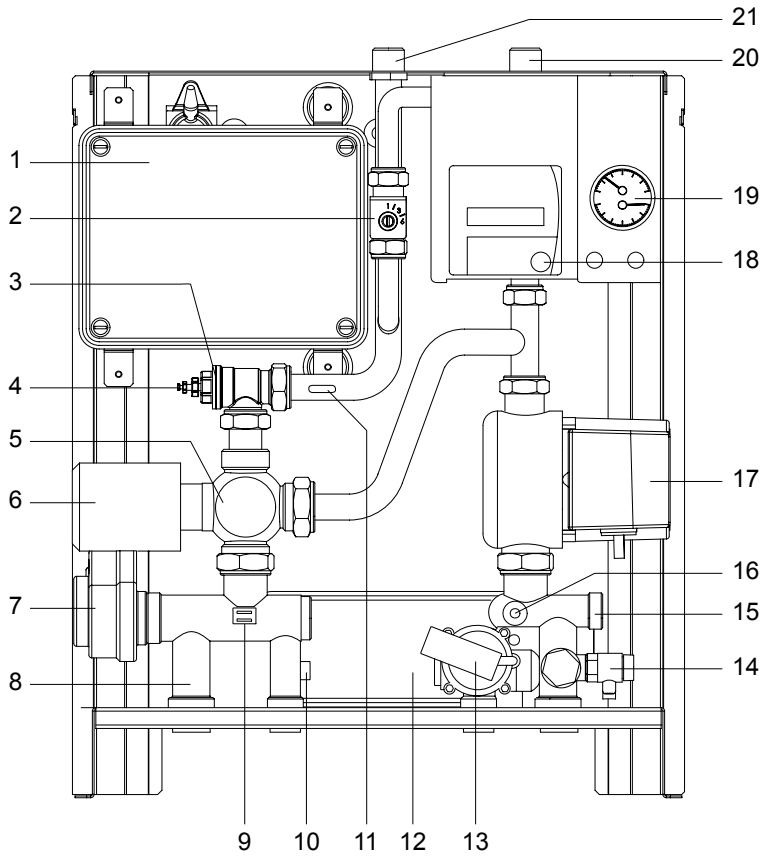

1. P.C.B. box
2. By-pass valve
3. Water filter
4. Flow sensor Heat meter
5. Mixing valve
6. Mixing valve Motor
7. Motorised Valve
8. Flow group
9. Central Heating Temperature Probe
10. Domestic Hot Water Temperature Probe
11. C.H. temperature probe
12. Secondary Heat Exchanger
13. Pressure gauge connections
14. Drain Valve
15. Retourn group
16. D.H.W.Flow Switch
17. Circulator
18. Heat meter
19. C.H. Termperature and Pressure Gauge
20. Return pipe
21. Flow pipe

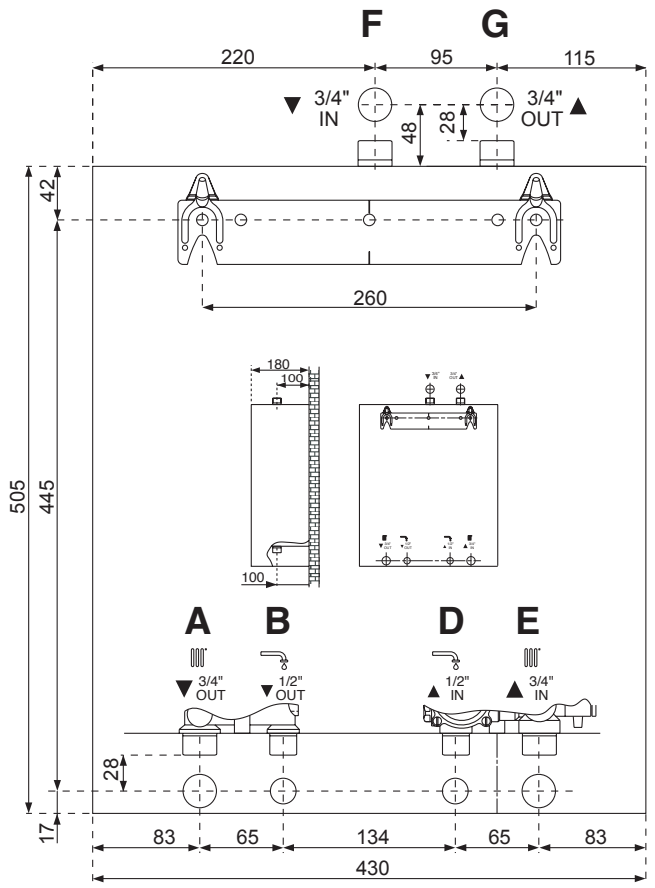

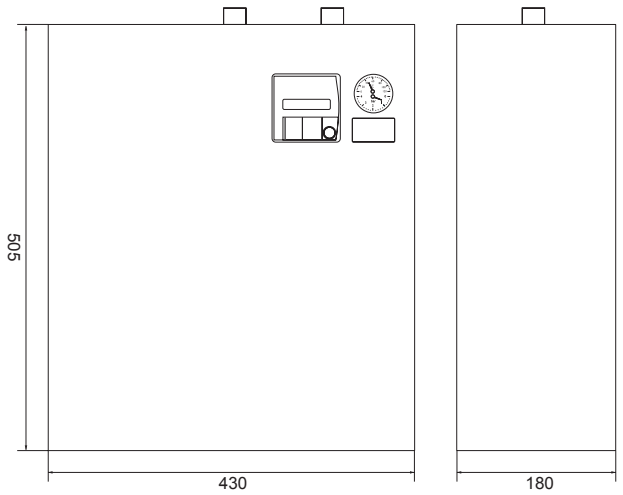

A = Central Heating Flow
B = Domestic Hot Water Outlet
D = Domestic Hot Water Inlet
E = Central Heating Return
F = Primary Flow Connection
G = Primary Return Connection

Description

Tecnical data

GENERAL	Type		**New NEXUS**
	CE Certification		80SD00236
	Description		Heat meter unit
	Minimum operating temperature	°C	6
CENTRAL HEATING	CH residual head	m.c.a.	1,23
	CH pressure, max/min	bar	5 / 0,5
	CH temperature, max/min (High temperature range)	°C	85 / 30
	CH temperature, max/min (Low temperature range)	°C	50 / 23
DOMESTIC HOT WATER	DHW temperature, max/min	°C	50 / 30
	DHW flow rate (ΔT=30°C)	l/min	19,4
	Minimum DHW flow rate	l/min	3
	DHW pressure max/min	bar	6.0 / 0.2
ELECTRIC	Electrical supply	V/Hz	230/50
	Power consumption	W	137
	Electrical protection	IP	X4D
	Weight	kg	20
	Dimension (L x A x P)	mm	430x505x180

Installation

Sitting the heat meter
In order to ensure trouble-free operation, the installation position of the heat meter must be suitable for the limit operating temperature and be protected against atmospheric agents.
The heat meter is designed for wall mounting and may not be installed on bases or floors.
The heat meter must be installed on a wall capable of supporting its weight. The wall must be of sound condition and non-removable so that the live electrical parts cannot be accessed through the rear frame opening.
When creating a space for the boiler, observe the minimum clearances that ensure accessibility to the boiler components, as indicated in section “Clearances”.

Clearances
In order to allow access to the interior of the boiler for maintenance purposes, the boiler must be installed in compliance with the minimum clearances indicated in figure below.

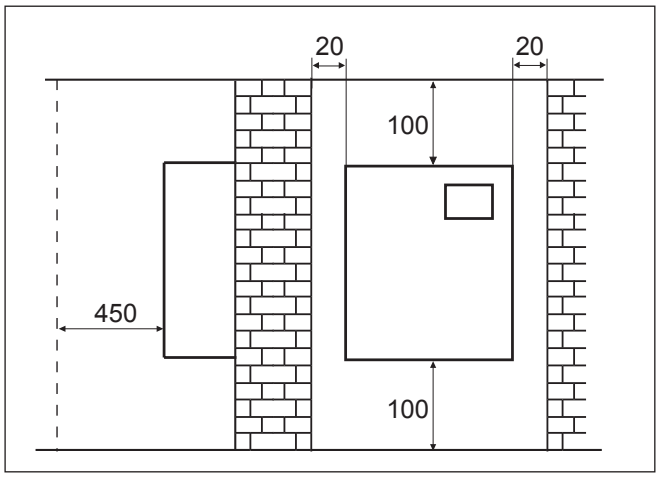

Mounting the heat meter
Position the heat meter based on the measurements given alongside.
Secure the metal bracket to the wall using screw anchors, which must be inserted correctly (in line with good engineering practice) and hang the heat meter.

Warning:
When drill the wall be careful to not damage existing electrical cables or pipes.

Water connections
Warning: before making the hydraulic connection, you must arrange for the system to be cleaned thoroughly to eliminate any residue or dirt that could compromise the proper operation of the heat meter. Check that the expansion tank capacity is adequate for the system’s water content and check that pressure relief devices are fitted.

Next figures illustrate the upper connections for the hydraulic connection to the primary circuit and the lower connections for connecting to the secondary domestic circuit.

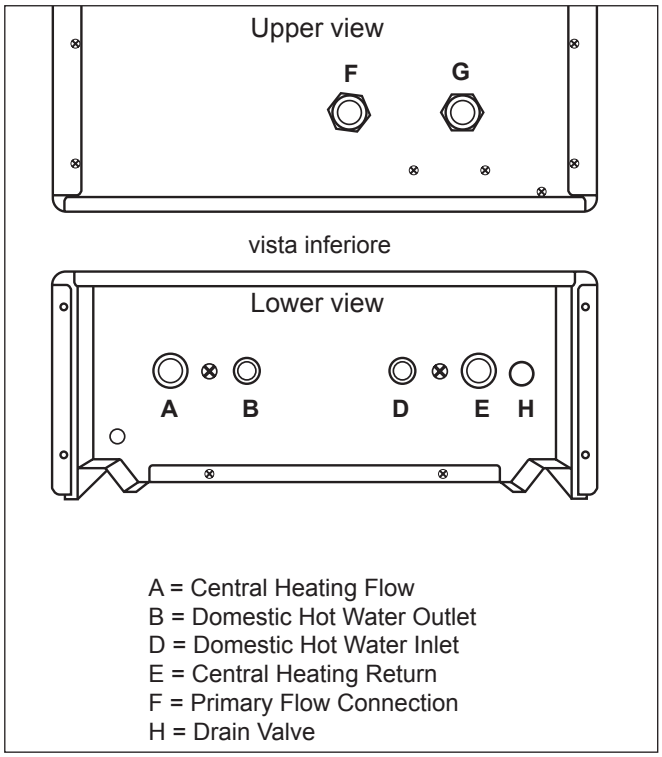

When connecting the heat meter to the primary system, check that this system is suitable and compatible with the product:
- check that the pressure on the primary system does not exceed 3 bar;
- the flow temperature is 85°C at most;
- the system includes all the safety and operating devices required to ensure the trouble-free operation of the heat meter, such as a suitable expansion tank and pressure relief valves. It is recommended that shut-off faucets be fitted upstream and downstream the heat meter to facilitate its maintenance and inspection.

When connecting to the domestic circuit check that:
- the maximum mains pressure does not exceed 6 bar; if it does, it is necessary to install a pressure reducing valve.
- the minimum mains pressure is above 0.2 bar, the threshold below which the devices regulating domestic hot water production do not function.

Warning:
The heat meter must be connected to a heating system and domestic water system , both of which are dimensioned according to its performance and power (See Technical Data).
Before connecting the heat meter make sure that you:
- carefully wash the system pipes in order to remove any residues of screw thread, welding or dirt which might impede the correct operation of the boiler;
- in the case of particularly hard water, there is the risk of a build-up of limescale which will reduce the efficiency of the heat meter’s components.

To dimension the heating system's piping and radiant elements, calculate the circulation pump's head value and the residual head value in relation to the flow required, in accordance with the values given in the graph "Residual head of the system".

Residual head of the pump

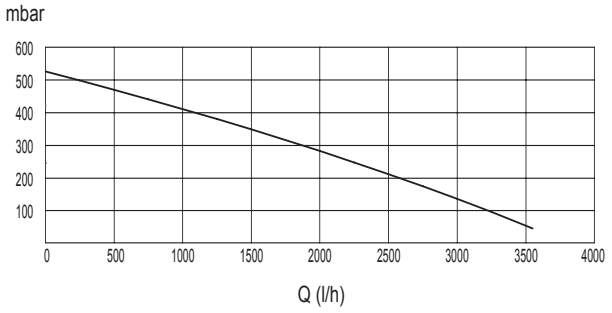

Residual head of the system

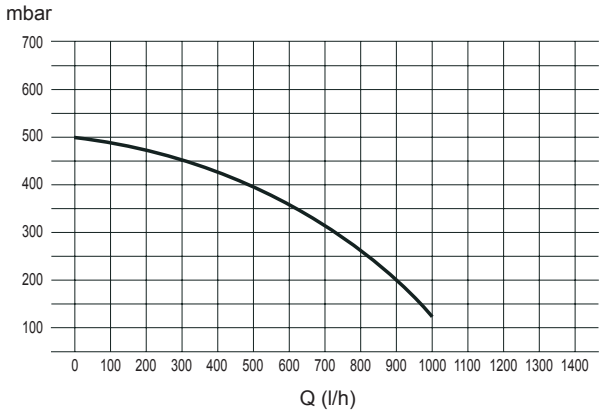

Water circuit diagram

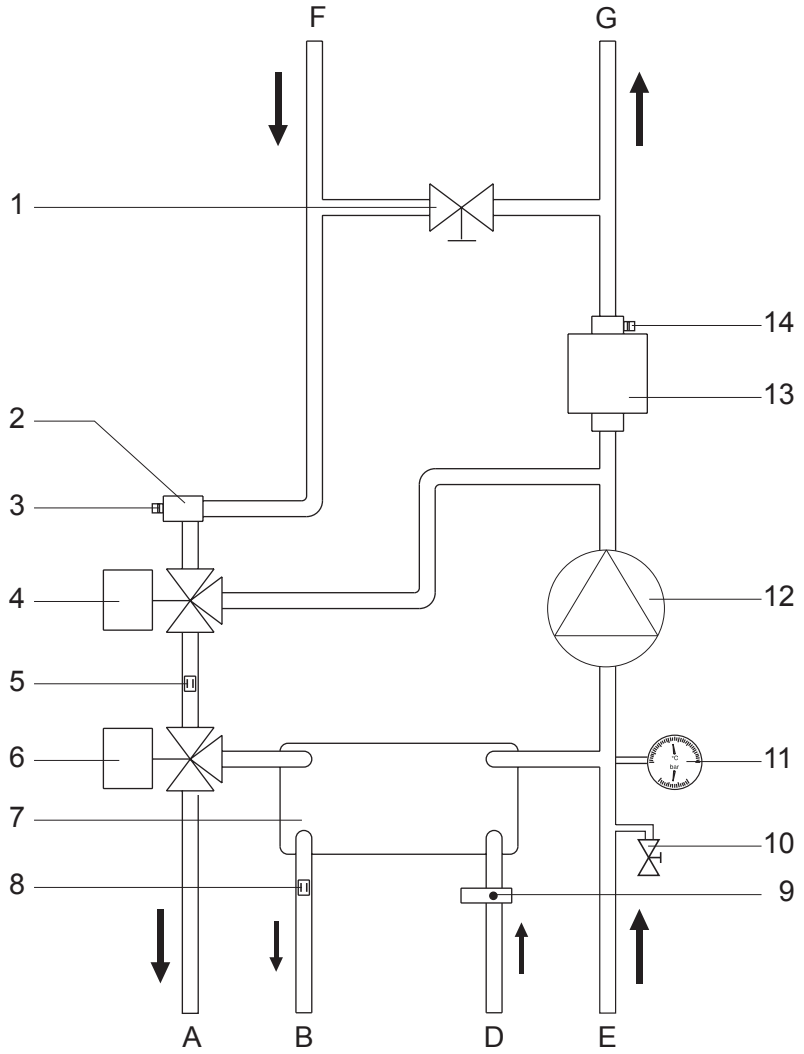

1. By-pass
2. Water Filter
3. Flow sensor Heat Meter
4. Mixing valve
5. Central heating tempertature probe
6. Motorised valve
7. Secondary Heat Exchanger
8. Domestic Hot Water Temperature probe
9. Domestic Hot Water Flow Switch
10. Drain valve
11. C.H. Termperature and Pressure Gauge
12. Circulation Pump
13. Heat Meter
14. Return sensor heat Meter

A = Central Heating Flow
B = Domestic Hot Water Outlet
D = Domestic Hot Water Inlet
E = Central Heating Return
F = Primary Flow Connection
G = Primary Return Connection

Installation

Warning:
Before working on the heat meter disconnect the electrical supply using the external switch since the appliance is always switched on.

Electrical connection
For greater safety, have qualified personnel carry out a careful inspection of the electrical system; the manufacturer will not be liable for any damage caused by the lack of earthing of the system or for faults in the supply of electricity..
Check that the system is suitable for the heat meter's maximum power consumption indicated on the plate and check that the cable section is not less than 1.5 mm^2.
It is essential that the appliance is properly connected to an efficient earthing system to ensure its safe operation.

The heat meter comes complete with a plugless power supply cable. The supply cable must be connected to a 230V-50Hz mains system observing L-N polarity and the earth connection ⏚ .

Important!
The mains connections are to be made with a fixed connection (not with a wander plug) and provided with a double-pole switch having a 3 mm contact opening distance at least.
Contact qualified staff for the replacement of the power supply cable.
The use of multiplugs, extensions or adaptors is strictly prohibited.
It is strictly forbidden to use the piping from the hydraulic system for the appliance earthing connection.
The appliance is not protected against the effects caused by lightning.
If the mains fuses have to be changed, use rapid 2A fuses.

Electric diagram

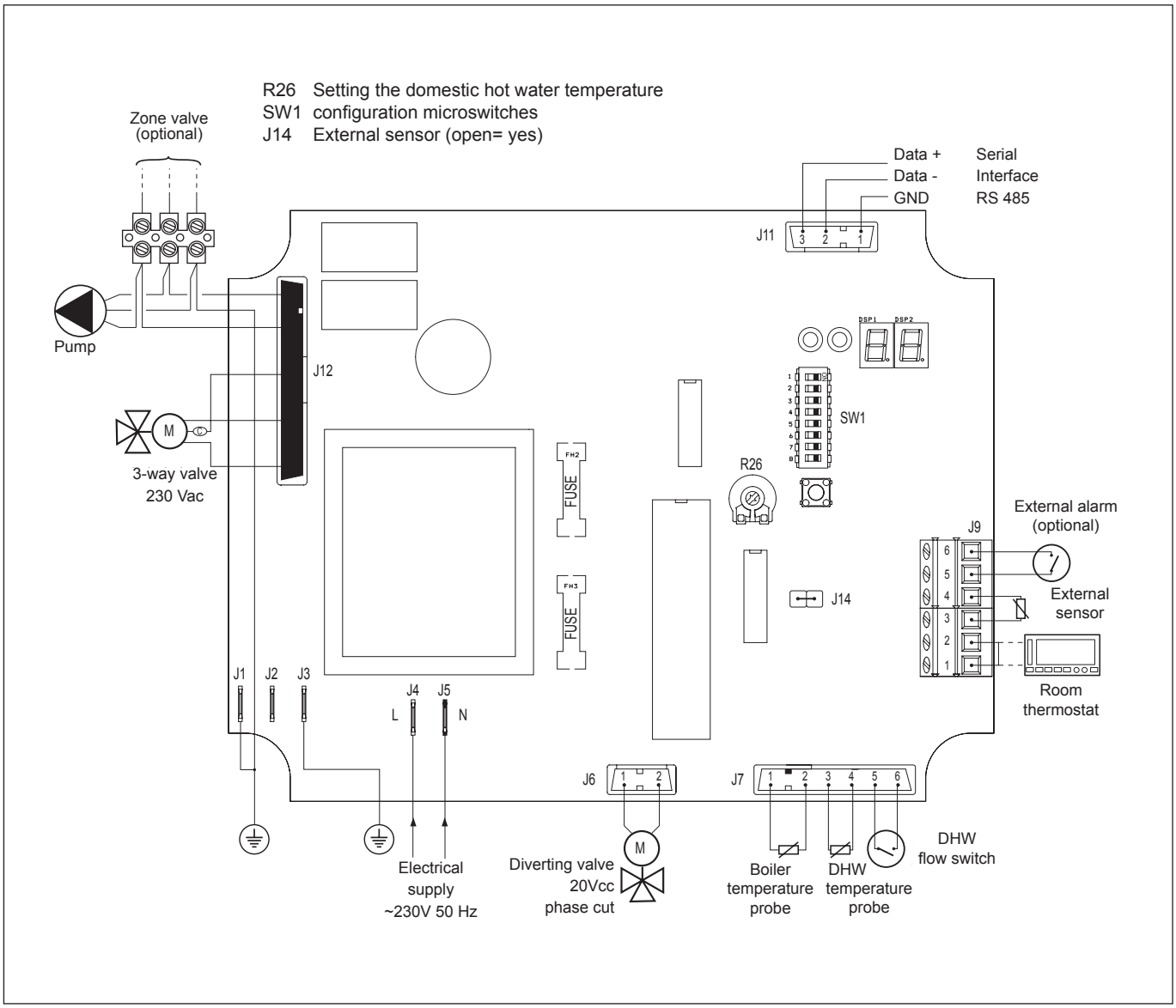

Installation

To gain general access

Warning: before working on the heat meter disconnect the electrical supply using the external switch since the appliance is always switched on.
Ensure low voltage and high voltage circuits are cabled separately to avoid indiced voltages in the low voltage circuits.

Removing the casing

To removing the casing it is necessary to:
- Back off the retaining screws on the top and bottom of the heat meter
- Tilt the casing slightly to release the supporting hooks and withdraw horizontally (see figures below).

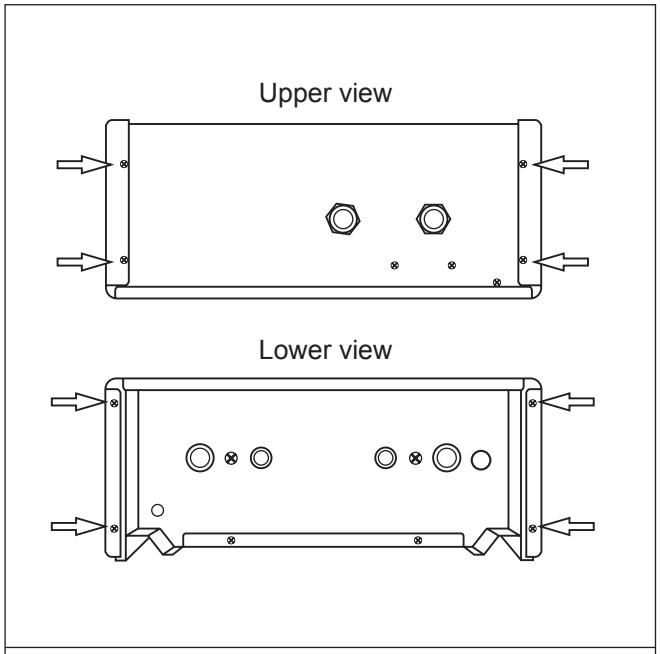

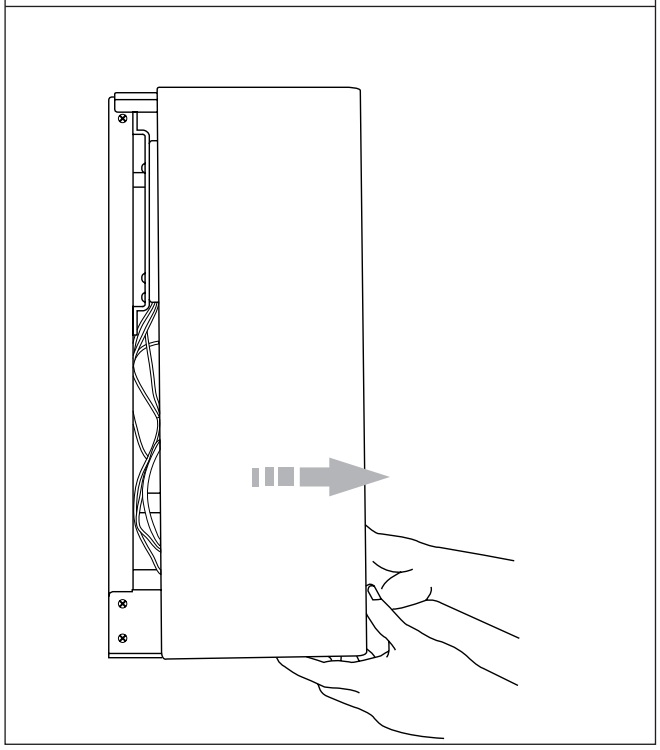

Positioning the data plate

To position the data plate it is necessary to:
- remove the casing (see “Removing the casing”)
- Stick the data plate on the internal surface of the casing where indicated on figure below.

Installation

Warning:
Before working on the heat meter disconnect the electrical supply using the external switch since the appliance is always switched on.
Ensure low voltage and high voltage circuits are cabled separately to avoid indiced voltages in the low voltage circuits.

Peripherichal connections
Use at least 1.5 mm^2 section cables for the peripherichal connections

Fitting the room-thermostat
To connect the room thermostat it is necessary to:
- remove the casing (see “Removing the casing”).
- back off the retaining screws of the control unit and remove the cover;
- slide the room thermostat cable through the glands on the tray and control unit;
- connect the room thermostat cable to the electrical terminal board **J9 on positions 1 and 2** removing the connecting jumper;
- reclose the control unit box and casing in sequence.

Fitting the external sensor
To connect the external sensor it is necessary to:
- remove the casing (see “Removing the casing”)
- back off the retaining screws of the control unit and remove the cover;
- slide the room thermostat cable through the glands on the tray and control unit;
- connect the room thermostat cable to the electrical terminal board **J9 on positions 3 and 4**;
- reclose the control unit box and casing in sequence.

N.B.:
use exclusively the external probe in equipment, than is found inside the package.

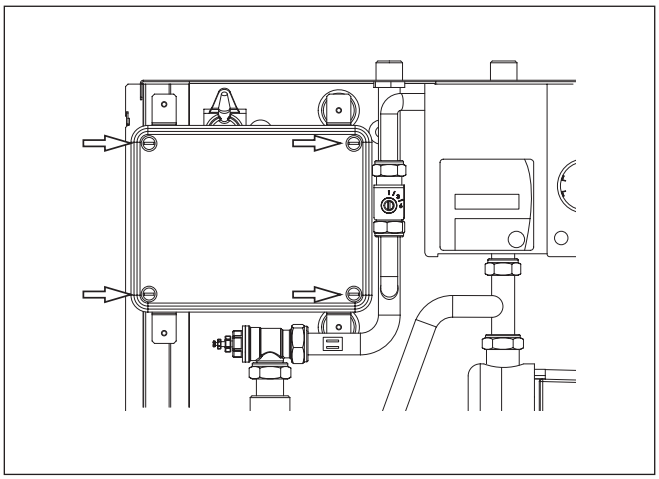

Commissioning

WARNING:
Before working on the heat meter disconnect the electrical supply using the external switch since the appliance is always switched on.
The heat meter must be started up by a legally registered qualified engineer to ensure its safety and trouble-free operation.

Initial preapration
The following checks and operations must be carried out before the heat meter enters into commission:
- check that the circulation pump has not seized up; if necessary release it by removing the plug and applying a screwdriver to the drive shaft;
- open the radiator bleed valves;
- check that the plug of any bleed valve fitted to the system is slackened;
- gradually open the shut-off faucet fitted upstream the heat meter and close the radiator bleed valves as soon as water escapes;
- check that the pressure in the secondary circuit in communication with the primary circuit stabilises between 0.5 and 3.0 bar.

Electricity supply:
- check that the electrical connection has been carried out in the correct manner by assembling a double-pole switch with a minimum opening distance for the contacts of 3 mm; also check that the earthing wire has been correctly attached.
- check that the operating voltage and frequency match the data given on the heat meter plate;
- check the L-N polarity of the connection;
- check the efficiency of the earthing connection.

Setting the domestic hot water temperature
To set the DHW temperature on use the R26 potentiometer mouted on control board.
Minimum temperature setting: 30°C (complete counter-clockwise rotation)
Maximum temperature setting: 50°C (complete clockwise rotation)

Operation setting
To optimize the heat meter operation it is possible to modify same control board parameters.

Configuration
Using the **SW1** control board microswitches it is possible to execute a series of configurations on base of the CH system type and the sitting of heat meter.

Configuration is made by the following two-position microswitches:

n°	Function
1 **2**	Heating slope selection
3	System selection
4 **5** **6** **7** **8**	Identification number of the head meter

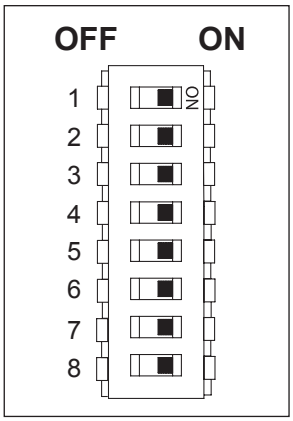

System type selection
Using microswitch **3** it is possible to choose the type of system where the heating meter is installed.

n° 3	System type
ON	Heating with radiators
OFF	Floor heating

Heating slope selection
After system type selection it must choose the right heating slope.
Using microswitches **1** and **2** it is possible to select one of four heating slopes; CH flow temperature depend from the external temperature and the system type.

n° 1	n° 2	Heating slopes
ON	ON	Slope 1
OFF	ON	Slope 2
ON	OFF	Slope 3
OFF	OFF	Slope 4

Floor heating				
T.est [°C]	**Slope 1 [°C]**	**Slope 2 [°C]**	**Slope 3 [°C]**	**Slope 4 [°C]**
-10	50	45	42	40
0	40	40	40	38
10	35	33	30	28
15	30	28	25	23

Heating with radiators				
T.est [°C]	**Slope 1 [°C]**	**Slope 2 [°C]**	**Slope 3 [°C]**	**Slope 4 [°C]**
-10	85	80	75	70
0	75	65	55	55
10	60	50	40	40
15	40	35	35	30

Heating slopes diagram

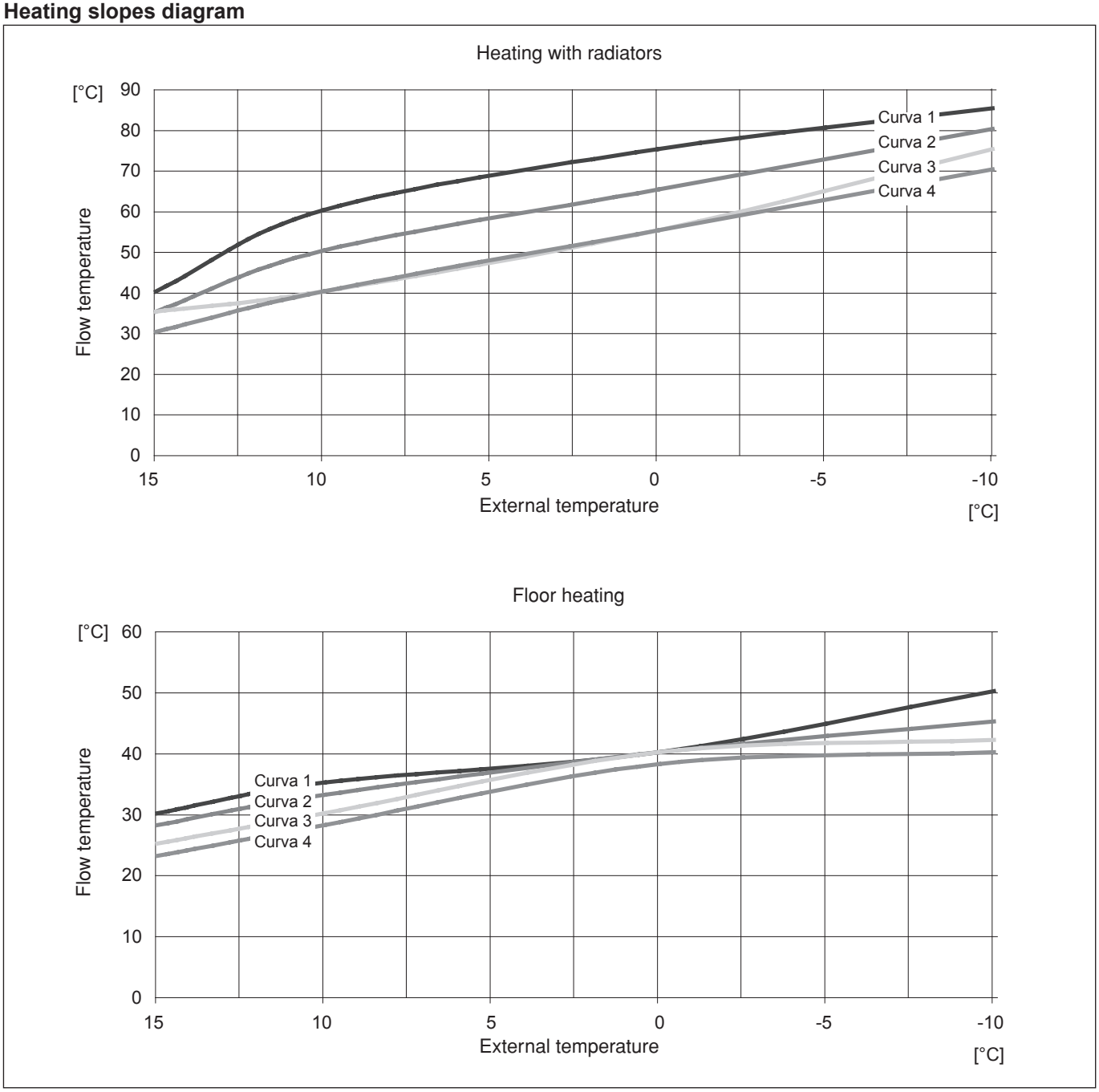

Commissioning

Data/alarm display
The electronic P.C.B has a display which makes it possible to view a series of values and which indicates the appliance error codes.
If the setting button (located on the electronic P.C.B. underneath the SW1 microswitches) is pressed, the displayed sequence changes in the following order:

- "**tE**" = External temperature
  xx = External temperature value

- "**tI**" = system flow temperature
  xx = system flow temperature value
  yy = temperature set-point for the flow to the system

- "**tS**" = domestic hot water temperature
  xx = domestic hot water temperature value
  yy = temperature set-point for the domestic hot water;

- Error code. → →

Display example: **tI** **20** **70**
system flow temperature
value recorded 20°C
set-point value 70°C

The error codes are displayed automatically

Error code	description
E0	system flow temperature sensor malfunction
E1	maximum system flow temperature alarm
E2	outdoor temperature sensor malfunction
E3	domestic hot water temperature sensor malfunction
E4	maximum domestic hot water temperature alarm
E5	outdoor alarm

The operating status is displayed using two LEDs on the electronic P.C.B.

LED	on	off	flashing
green	P.C.B. operating	- no power supply - P.C.B. malfunction	not applicable
red	serious malfunction (total stoppage of power supply)	no malfunction	partial malfunction (partial stoppage of power supply)

Setting the communication address (BUS address)
The heat meter's functional and design features make it particularly suited for inclusion in a centralised heating system where provision is also made for the display and overall management of the operating data.
This is possible through a serial communication interface type **EIA RS-485**. In fact, using microswitches "**4**" - "**5**" - "**6**" - "**7**" - "**8**", it is possible to set up to 32 different communication addresses so that the same number of heat meters can be managed with a single centralised unit.

Microswitch					address
8	7	6	5	4	
ON	ON	ON	ON	ON	0
ON	ON	ON	ON	OFF	1
ON	ON	ON	OFF	ON	2
ON	ON	ON	OFF	OFF	3
ON	ON	OFF	ON	ON	4
ON	ON	OFF	ON	OFF	5
ON	ON	OFF	OFF	ON	6
ON	ON	OFF	OFF	OFF	7
ON	OFF	ON	ON	ON	8
ON	OFF	ON	ON	OFF	9
ON	OFF	ON	OFF	ON	10
ON	OFF	ON	OFF	OFF	11
ON	OFF	OFF	ON	ON	12
ON	OFF	OFF	ON	OFF	13
ON	OFF	OFF	OFF	ON	14
ON	OFF	OFF	OFF	OFF	15
OFF	ON	ON	ON	ON	16
OFF	ON	ON	ON	OFF	17
OFF	ON	ON	OFF	ON	18
OFF	ON	ON	OFF	OFF	19
OFF	ON	OFF	ON	ON	20
OFF	ON	OFF	ON	OFF	21
OFF	ON	OFF	OFF	ON	22
OFF	ON	OFF	OFF	OFF	23
OFF	OFF	ON	ON	ON	24
OFF	OFF	ON	ON	OFF	25
OFF	OFF	ON	OFF	ON	26
OFF	OFF	ON	OFF	OFF	27
OFF	OFF	OFF	ON	ON	28
OFF	OFF	OFF	ON	OFF	29
OFF	OFF	OFF	OFF	ON	30
OFF	OFF	OFF	OFF	OFF	31

Heat meter protection and safety system

Anti-freeze protection
This function is carried out by the room thermostat (supplied as standard with the heat meter) which requests heat if the ambient temperature falls below the limit set (by default +6°C)

Maximum flow temperature
Based on the type of heating system selected, the control board regulates flow water temperature subject to the condition:
Flow temperature < maximum flow temperature
with:
Max flow temperature = 90°C for radiator system (pre-set value, non-changeable)
Max flow temperature = 52°C for floor radiant tube system (pre-set value, non-changeable)

Limescale protection
In order to ensure maximum efficiency of the domestic plate exchanger, the temperature in the domestic hot water system should not exceed 60°C, so as to reduce the likelihood of limescale forming. In the "domestic hot water production" operating mode, the control board regulates the domestic hot water temperature subject to the following conditions:
Domestic hot water temperature < Max domestic hot water temperature Flow;
temperature < Max flow temperature for production of domestic hot water
with:
Max. domestic hot water temperature = 60°C (pre-set value, non-changeable)
Max flow temperature for production of domestic hot water = 90°C (pre-set value, non-changeable)
At the end of each domestic hot water production cycle, the control board also executes a postcirculation in the exchanger's primary circuit at the temperature of 30°C (pre-set value, nonchangeable), for a period of 10 seconds.

Circulation pump anti-seizure
This function automatically activates the circulation pump for about 10 seconds if it is out of use for long periods (6-12 hours).

Temperature probe fault diagnostic function
This function checks regularly that the temperature probes are functioning correctly. The check is carried out on the external temperature probe, flow water temperature probe and the domestic hot water probe. When a fault occurs on the:

1 - **external temperature probe**, this involves:
- **A** heat meter set for floor radiant tube system
  - setting the setpoint for regulating the flow water temperature:
    Flow T = ALL flow T
    with alarm flow temperature = 35°C
    (pre-set value, non-changeable)
  - a visual signal through a red flashing led (located on the board inside the control unit)
- **B** heat meter set for radiator system
  - setting the setpoint for regulating the flow water temperature:
    Flow T = ALL flow T
    with alarm flow temperature = 70°C
    (pre-set value, non-changeable)
  - a visual signal through a red flashing led (located on the board inside the control unit)

2 - **flow water temperature probe**, this involves:
- **A** heat meter set for floor radiant tube system
  - heat meter operation interrupted (mixing valve closes);
  - a visual signal with the red led on continuously (located on the board inside the control unit).
- **B** heat meter set for radiator system
  - exclusion of automatic regulation of mixer position. In the different operating modes, the mixer can only occupy the intermediate mid-way position.
  - a visual signal through a red flashing led (located on the board inside the control unit)

3 - **domestic hot water temperature probe**, this involves:
- exclusion of the automatic regulation of the domestic hot water delivery temperature;
- regulation of the flow water temperature to
  Flow T = ALL flow T
  with alarm flow temperature = 70°C
  (pre-set value, non-changeable)
- a visual signal through a red flashing led (located on the board inside the control unit)

Alarm input
A digital input is available on the board for managing alarms detected by external devices.
When the input is activated:
- the heat meter ceases to operate (mixing valve closes);
- a visual signal is given with the **red led on continuously** (located on the board inside the control unit).

Calorie meter fault display and management

Error display on LCD	Description of the error	Corrective measures/notes
F:0	Wrong flow direction (appears only in the Info level)	- Check assembly (pay attention to the arrow on the meter body) - Check the hydaulic connections - Check that the circulation pumps and thermostats are working correctly
F:1	Flow temperature below return temperature (appears only in the Info level)	- Check that the flow meter is installed in the return circuit and/ or check that the temperature sensor is assembled correctly.
F:2	- Temperature outside measurement range (appears only in Info level) - Voltage too low, exceeded	- The device must be sent for repair
F:3	Hardware error	- Check that there is no external damage to the flow sensor, connecting cable or processing unit
F:4	Device fault	- A major functional error has been recorded
F:6	Interruption in the flow measurement circuit	- The recorded errors may be read using the maintenance tool - The device must be sent for repair
F:7	Short circuit in the flow measurement circuit	- Check for any mechanical damage to the temperature sensor and connections - The device must be sent for repair
F:8	Interruption in the return measurement circuit	- Check for any mechanical damage to the temperature sensor and connections - The device must be sent for repair
F:9	Short circuit in the return measurement circuit	- Check for any mechanical damage to the temperature sensor and connections - The device must be sent for repair
F:C	The maximum number of M-bus communications for the current month has been exceeded (appears only in the Info level)	- The error is corrected every month
F:d	The flow is excessive (above 4x Qp)	- Check the installation conditions

Replacing the calorie counter battery

The sealed battery inside the calorie counter will last a maximum of six years from the date given on the data plate. By this date the appliance must have been sent to the manufacturer for the replacement and disposal of the exhausted battery.

Maintenance

Maintenance is an essential part of the safe and efficient operation of the zone module and ensures its durability.
It should be performed in accordance with the instructions set out by current legislation.

Draining procedures

The draining of the heating system must be carried out as follows:
- switch off the zone module by moving the bipolar switch to the OFF position;
- shut off the zone module outlet/inlet valves;
- open the system drain valve and collect the escaping water in a container;
- empty the water from the lowest points of the system (where applicable).

If the system is to be left inactive in areas where the room temperature may fall below 0°C during winter, we recommend that anti-freeze liquid is added to the water in the heating system in order to avoid the need for repeated draining; in the event that this liquid is used make sure it is compatible with the components used in the zone module.
We recommend the use of anti-freeze products which contain PROPYLENE GLYCOLS as these inhibit corrosion (such as CILLICHEMIE CILLIT CC 45, which is non-toxic and performs anti-freeze, anti-limescale and anti-rust functions simultaneously); these should be used in the quantities suggested by the manufacturer, at the minimum stated temperature.
Regularly check the pH level of the water/anti-freeze mixture in the heating circuit and replace it when the value measured is lower than the limit prescribed by the anti-freeze manufacturer.
DO NOT MIX DIFFERENT TYPES OF ANTI-FREEZE.
The manufacturer will not be held liable for any damage caused by the appliance or the system as a result of inappropriate anti-freeze substances or additives being used.

Draining the domestic hot water system

Every time there is a danger of freezing, the domestic hot water system must be drained as follows:
- shut off the water mains inlet valve;
- open all the hot and cold water taps;
- empty out from the lowest points (where applicable).

Before beginning maintenance work:
- disconnect the appliance from the electricity supply by turning the external bipolar switch to the “OFF” position;
- shut off the central heating and domestic hot water system valves;
- after the work has been completed the initial set tings should be restored.

WARNING
Before handling, empty all components which may contain hot water, performing bleeding where necessary.
Descale the components, in accordance with the instructions provided on the safety data sheet of the product used, while ventilating the room and wearing protective clothing; avoid mixing different products and protect the appliance and surrounding objects.
If you detect a smell of burning or smoke, keep away from the appliance, disconnect it from the electricity supply, open all windows and contact the technician.

Elco Italia S.p.A.
Via Roma, 64
31023 Resana (TV)

420010110301